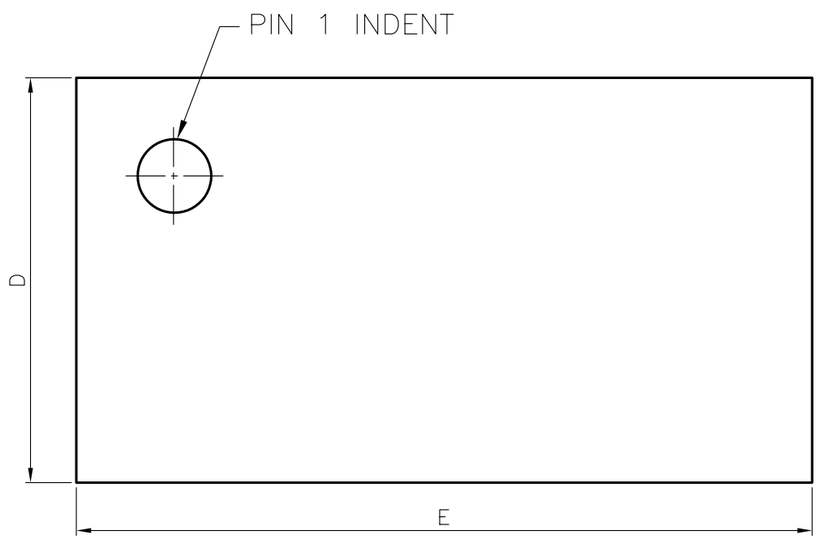

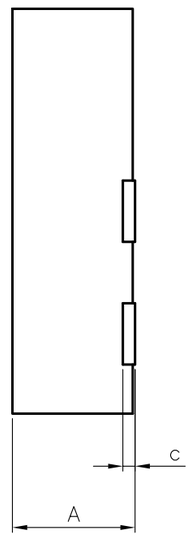

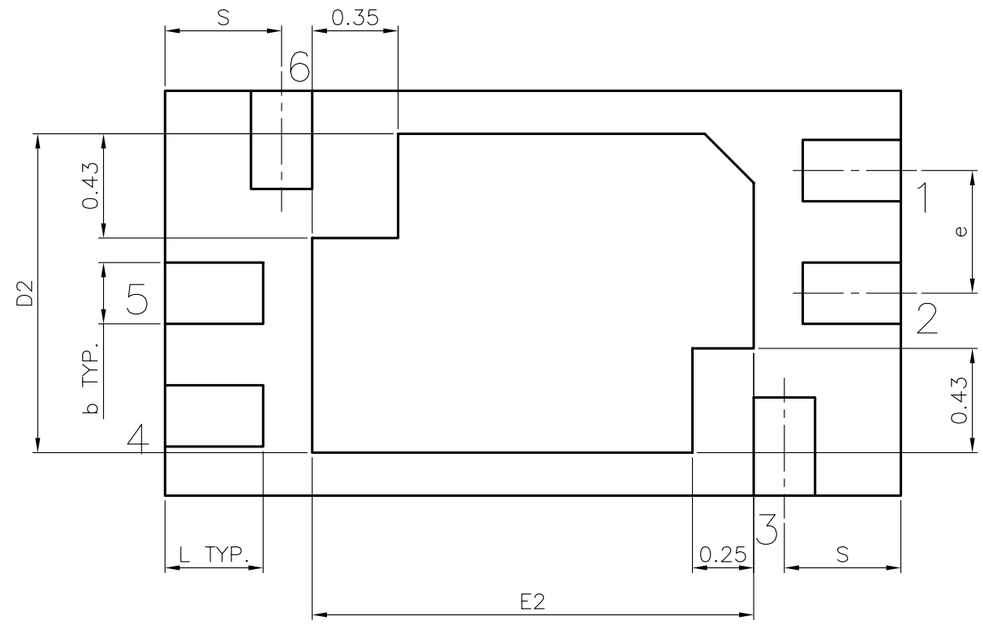

NOTE:

1. CONTROLING DIMENSION: mm
2. SUBSTRATE MATERIAL: Ag/Ni/Au
3. SUBSTRATE THICKNESS:0.20~0.25mm
4. TOLERANCE: ±0.008"[0.20mm] UNLESS OTHERWISE SPECIFIED.
5. OTHERWISE DIMENSION FOLLOW ACCEPTABLE SPEC.

SYMBOLS	DIMENSIONS IN MILLIMETERS		
	MIN	NOM	MAX
A	0.40	——	0.50
b	0.20	0.25	0.30
c	——	0.05	——
D	1.60	1.65	1.70
D2	1.25	1.30	1.35
E	2.95	3.00	3.05
E2	1.75	1.80	1.85
e	——	0.50	——
L	0.35	0.40	0.45
S	——	0.475	——

CUSTOMER :		LINGSEN 5-1 NAN 2ND ROAD T.E.P.Z PRECISION IND., LTD. TAICHUNG., TAIWAN. R. O. C
APPROVED BY	DATE	TITLE: 6L 3.00x1.65mm ULTRA THIN SMALL PACKAGE OUTLINE DRAWING (EXPOSED PAD:1.80x1.30mm)
DRAW BY: Sandy Sue	03/06/'07	
CHECK BY: Eric Chung	03/06/'07	
APPROVAL: Frank Yang	03/06/'07	DWG. NO. PO-UTS-002 REV. 0
APPROVAL: Jack Tu	03/07/'07	UNIT : mm SCALE : 40/1 SHEET 1 OF 1